C930e BUSINESS WEBCAM
C930e 商用网络摄像头

Complete Setup Guide
设置指南

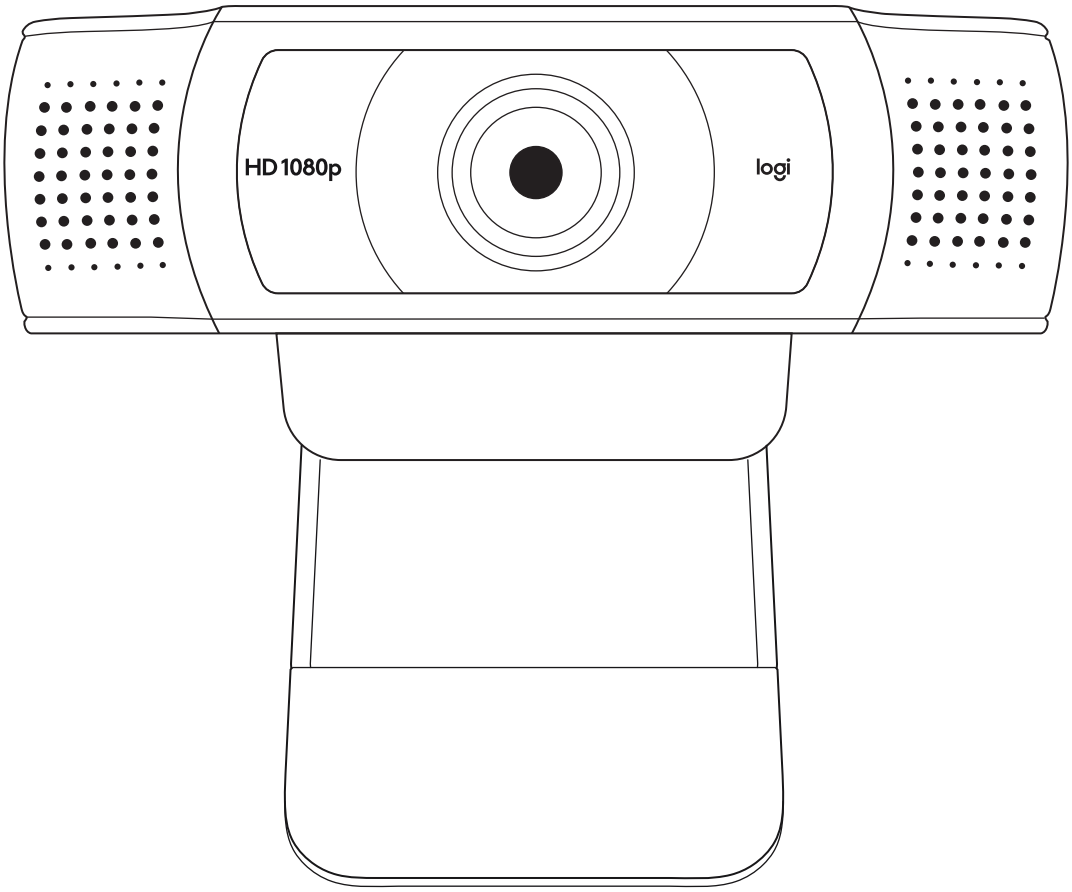

logitech 罗技®

CONTENTS

English 3

简体中文 7

KNOW YOUR PRODUCT

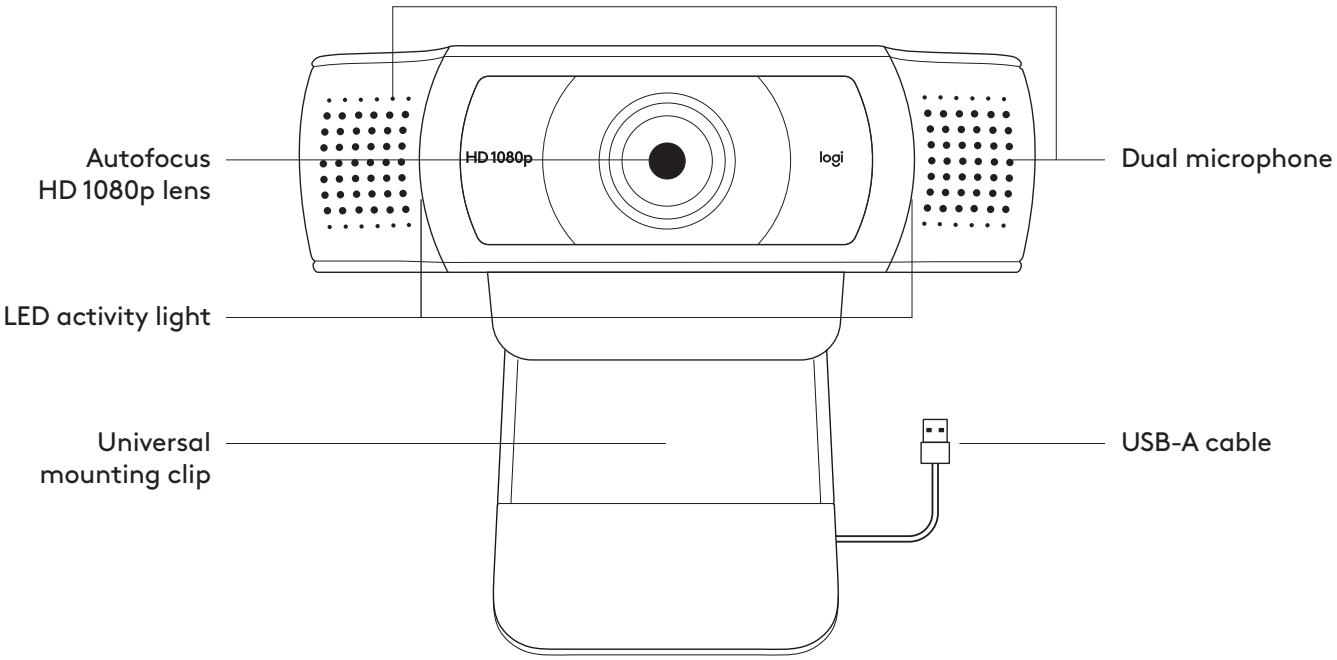

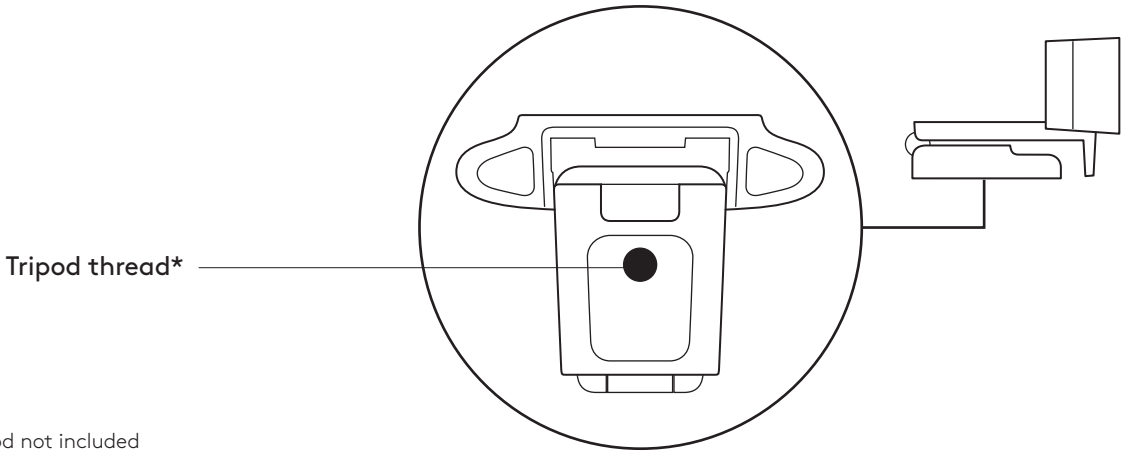

* Tripod not included

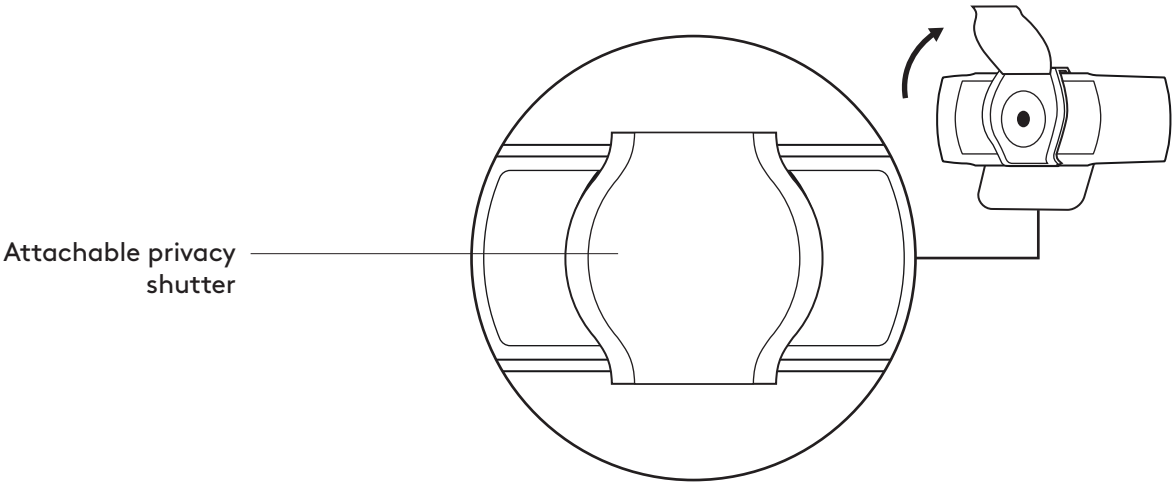

WHAT'S IN THE BOX

1 Webcam with 5 ft (1.5 m) attached USB-A cable
2 Privacy shutter
3 User documentation

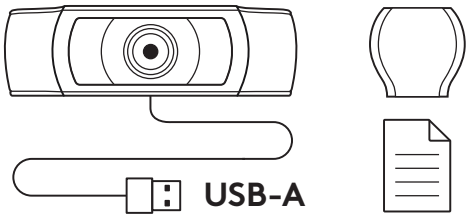

ATTACH THE PRIVACY SHUTTER

1 Attach external privacy shutter by locating the lens on the webcam.

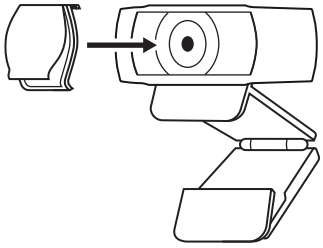

2 Snap it onto the front of the webcam, directly over the center.

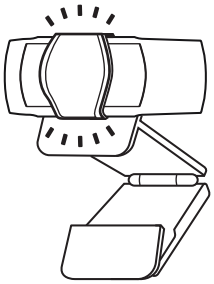

3 Manually adjust the privacy shutter to open or close as desired.

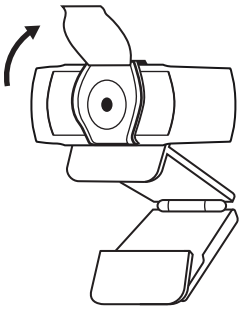

SETTING UP THE WEBCAM

For placement on a monitor

1 Place your webcam on a computer, laptop or monitor at a position or angle you desire.

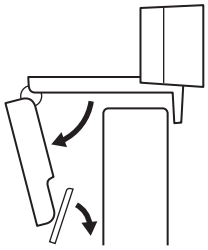

2 Adjust the webcam to make sure the foot on the universal mounting clip is flush with the back of your device.

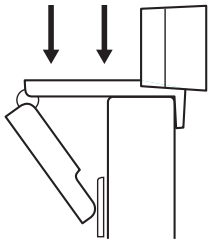

3 Manually adjust the webcam up/down to the best position to frame yourself.

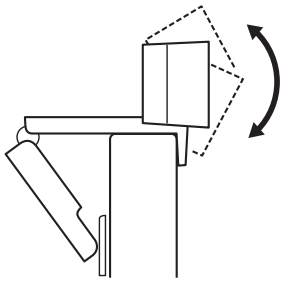

For placement on a tripod*

1 Locate the ¼ inch tripod thread on the bottom of the universal mounting clip.

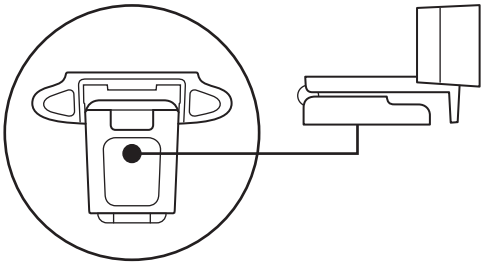

2 Secure the webcam on your tripod by twisting it into the ¼ inch thread.

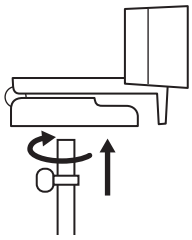

3 Place your webcam with the tripod anywhere you desire to the best position to frame yourself.

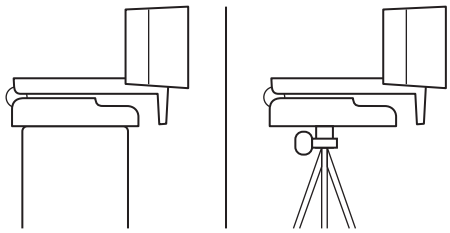

* Tripod not included

CONNECTING THE WEBCAM VIA USB-A

Plug the USB-A connector into the USB-A port on your computer.

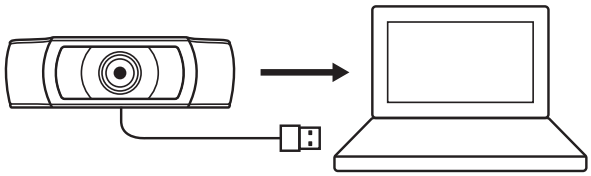

SUCCESSFUL CONNECTION

LED activity light will light up when the webcam is in use by an application.

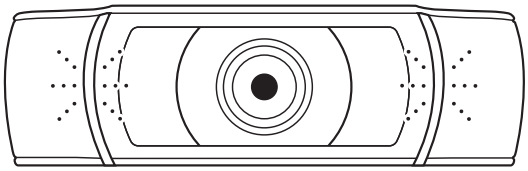

DIMENSIONS

INCLUDING FIXED MOUNTING CLIP:

Height x Width x Depth:
1.70 in (43.3 mm) x 3.70 in (94 mm) x 2.80 in (71 mm)

Cable Length: 5 ft (1.5 m)

Weight: 5.71 oz (162 g)

www.logitech.com/support/C930e

© 2021 Logitech. Logitech, Logi, 罗技 and the Logitech logo are trademarks or registered trademarks of Logitech Europe S.A. and/or its affiliates in the U.S. and other countries. Logitech assumes no responsibility for any errors that may appear in this manual. Information contained herein is subject to change without notice.

了解您的产品

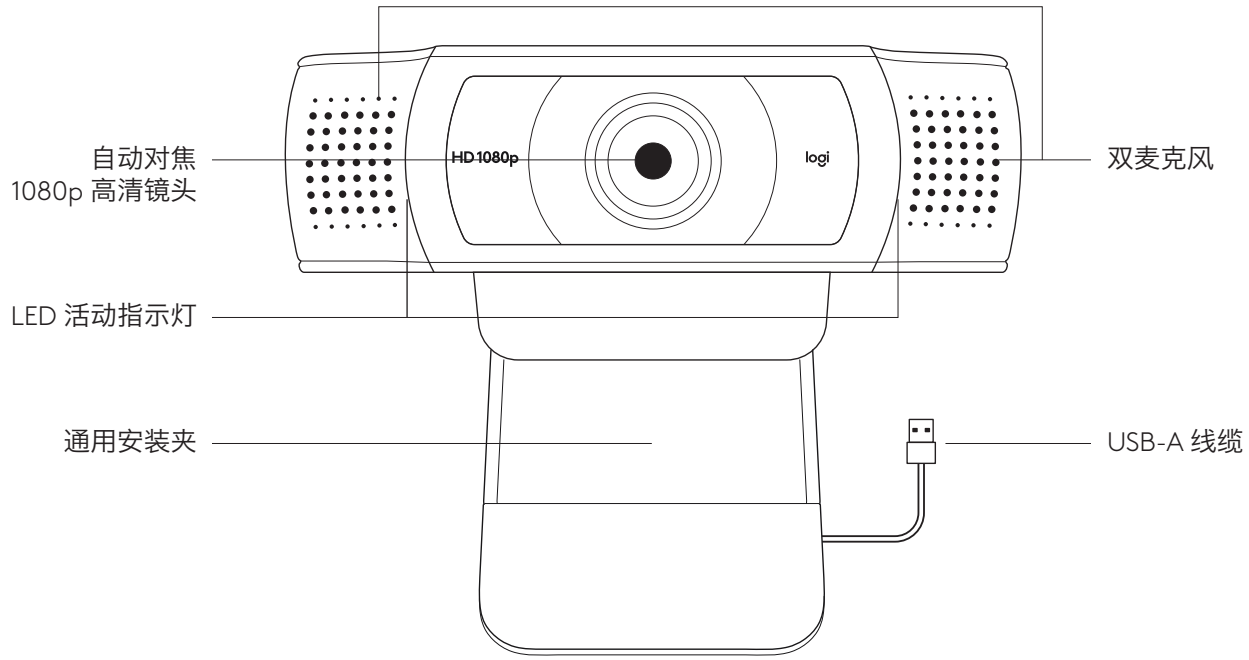

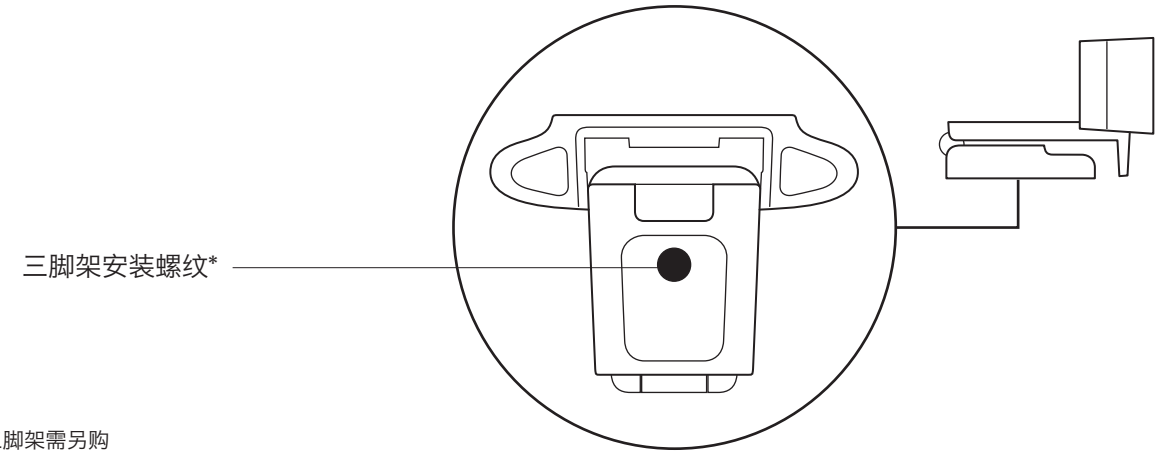

*三脚架需另购

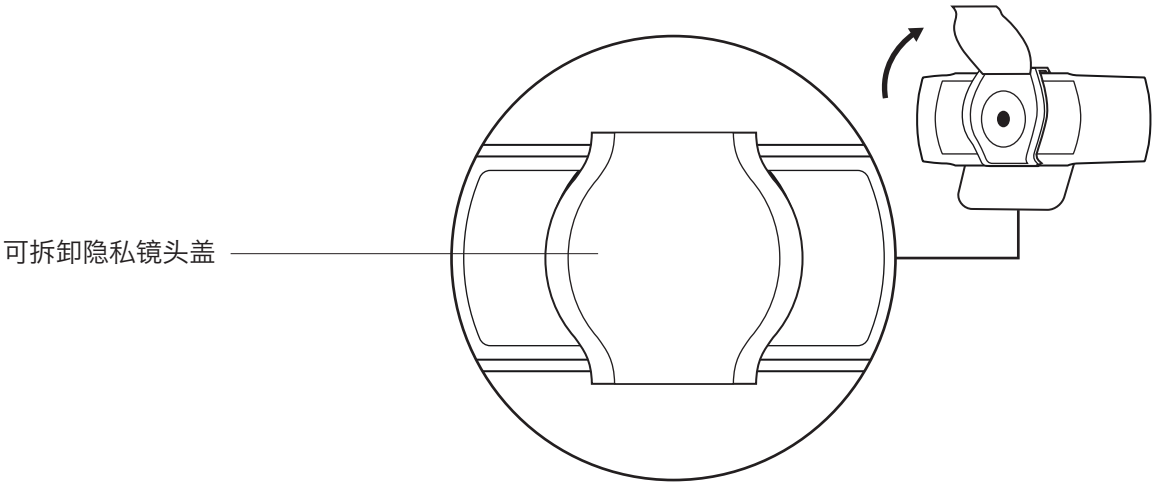

包装内容

1 网络摄像头，附约 1.5 米 USB-A 线缆
2 隐私镜头盖
3 用户文档

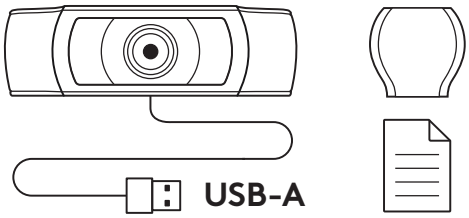

安装隐私镜头盖

1 将外置隐私镜头盖安装于网络摄像头镜头上。

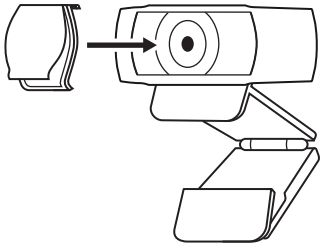

2 将其卡在网络摄像头的中央正上方。

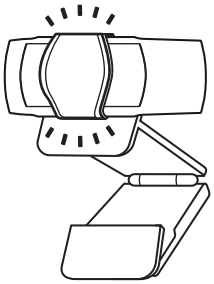

3 手动调整隐私镜头盖，根据需要打开或关闭。

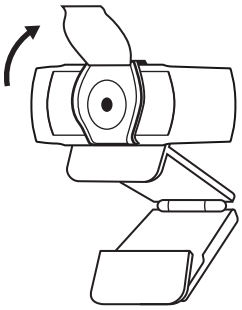

设置网络摄像头

放置于显示器上

1 将网络摄像头以所需的位置或角度放置在电脑、笔记本电脑或显示器上。

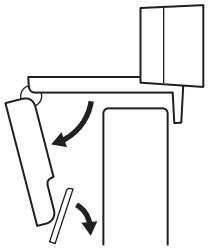

2 调节网络摄像头，确保通用安装夹支脚与显示器背面齐平。

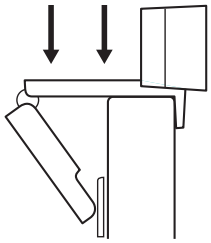

3 手动将网络摄像头上/下调节至合适的构图位置。

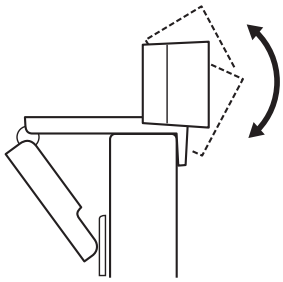

放置于三脚架上*

1 找到通用安装夹底部的 1/4 英寸三脚架安装螺纹。

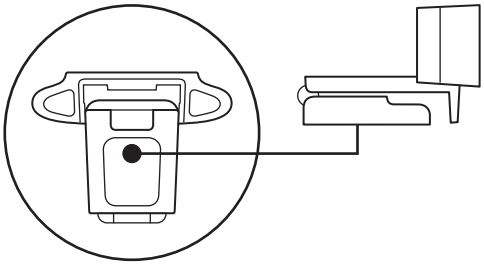

2 将三脚架拧入 1/4 英寸安装螺纹，将网络摄像头固定于三脚架上。

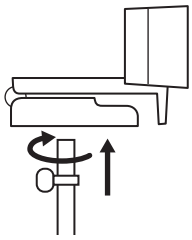

3 将网络摄像头和三脚架放置于您想要的合适位置以构图。

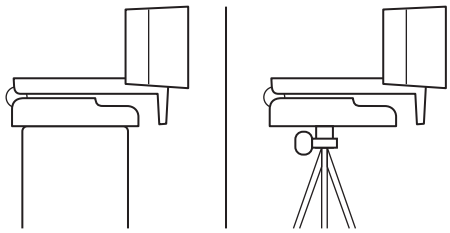

*三脚架需另购

通过 USB-A 连接网络摄像头

将 USB-A 接头插入电脑的 USB-A 端口。

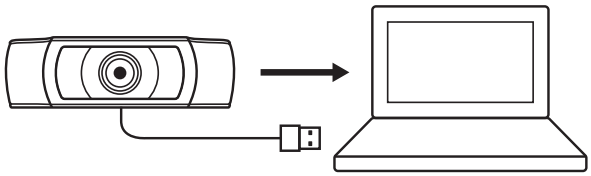

成功连接

当应用程序使用网络摄像头时，LED 活动指示灯将点亮。

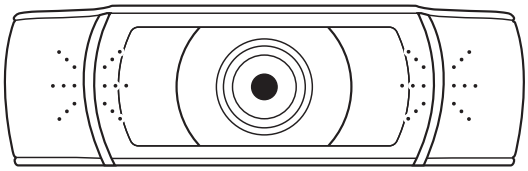

规格

包括固定的安装夹：

高 x 宽 x 深：
约 43.3 毫米 x 约 94 毫米 x 约 71 毫米

线缆长度：约 1.5 米

重量：约 162 克

www.logitech.com/support/C930e

版权所有 ©2021 年罗技。罗技、Logi、Logitech 和罗技标志为 罗技欧洲公司 和/或其美国及其他国家/地区附属公司的商标，并或已注册。罗技对于本手册中可能出现的任何错误不承担任何责任。本手册中包含的信息如有更改，恕不事先通知。

WEB-621-001913.003